RC 10615 B

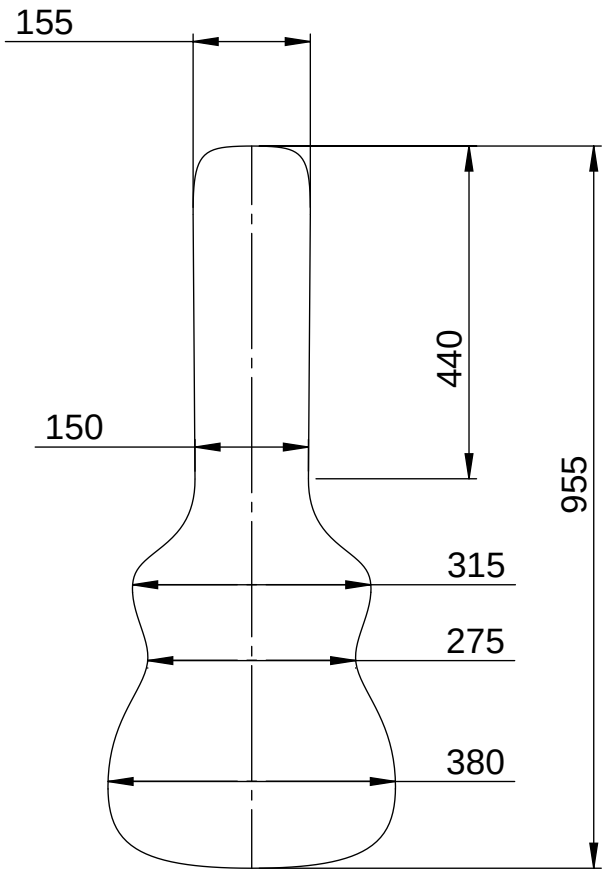

outside

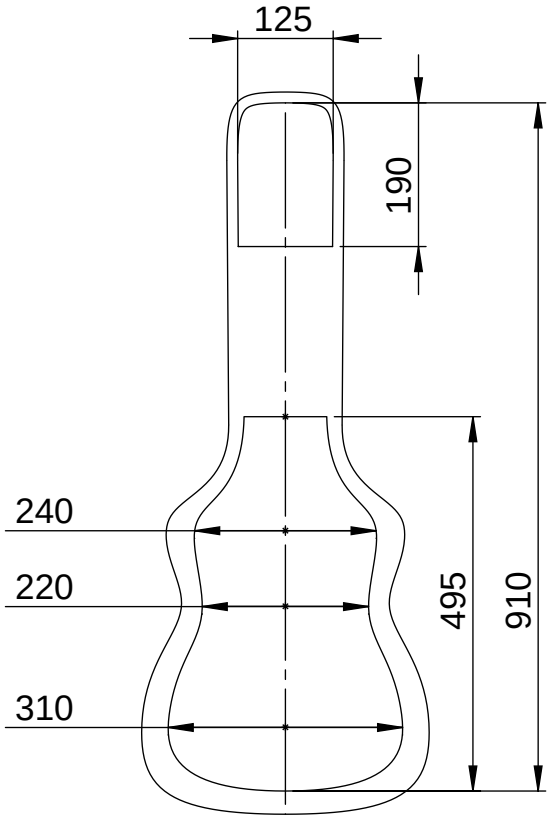

inside

approximate measurements in mm